Steering Lights Blue Panama Canal

Aqua Signal Steering Light Blue Series 55



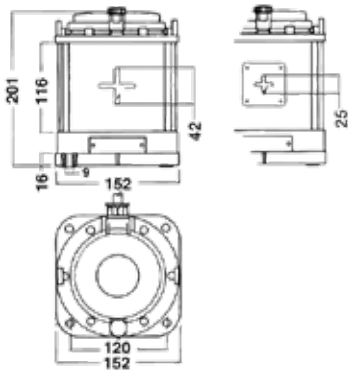

Aqua Signal Series 55 steering light blue

Steering navigation light incl. two wheel cross sizes. Blue colored lantern 230Vac with light source (max. 25W)

Product features:
Mains current: 0,11A
Voltage: 220/240Vac +10/-10%
Frequence: 50/60 Hz +5/-5%
Total power consumption: 25W
Ambient temperature: -30˚C to +45˚C
IP Rating: IP56
Body material: Polycarbonate, reinforced, colour black
Cable inlet: Cable Gland PG13.5 Polyamide (1 gland entry)
Certificate:Marine approved
Light source: 1 pc light bulb IT25, max. 25W BAY15D
Dimensions: 152x152x201mm LxWxH, weight 1.3 kg
Optic: Polycarbonate diffuser, blue color, stainless steel reflector in silver colour

Article numbers:

Article No.	Description	Light source	Voltage
89AQ3533557000	Steering Light Blue series 55 Aqua Signal	Bulb BAY15D 25W	230Vac

Aqua Signal LED Steering Light Blue Series 60



Aqua Signal Series 60 LED steering light blue

Steering navigation light incl. black cross direction right ahead vessel 115-230Vac LED

Product features:
Mains current: 0,03A
Voltage: 103/253Vac +10/-10%
Frequence: 50/60 Hz +5/-5%
Total power consumption: 2W
Ambient temperature: -25˚C to +55˚C
IP Rating: X6/X7
Lifetime: L70 Median useful life LED Ta45 100.000hr
Body material: Polycarbonate, reinforced, colour black
Cable inlet: Cable Gland M25 Polyamide (1 gland entry), cable diameter 10-17mm
Certificate:Marine approved
Light source: 1 pc LED mounted in the housing
Dimensions: 189x154x178mm LxWxH, weight 1.9 kg
Optic: Borosilicate glass diffuser

Article numbers:

Article No.	Description	Light source	Voltage
89AQ3328695000	Steering Light Blue series 60 Aqua Signal	LED 2W	115-230Vac

